Since 1898

CONSEW®

Model 7360R-7DD

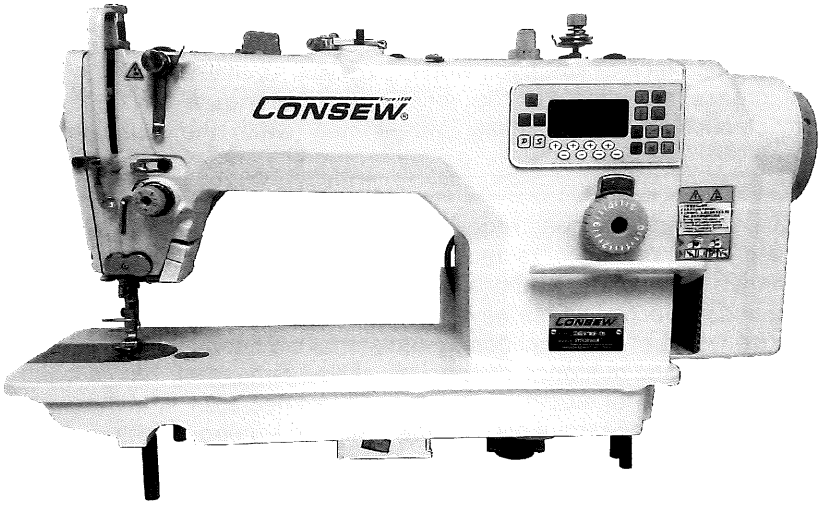

OPERATION AND PARTS MANUAL

©Consew 5-2018

IMPORTANT SAFETY INSTRUCTIONS

To get the most out of the many functions of this machine and operate it in safety,it is necessary to use this machine correctly.Please read this instruction Manual carefully before use.Whe hope you will enjoy the use of your machine for a long time.Please remember to keep this manual in a safe place.

1. Observe the basic safety measures,including, but not limited to the following ones,whenever you use the machine.
2. Read all the instructions,including,but not limited to this Instruction Manual before you use the machine. In addition, keep this Instruction Manual so that you may read it at anytime when necessary.
3. Use the machine after it has been ascertained that it conforms with safety rules/standards valid in your Country.
4. All safety devices must be in position when the machine is ready for word or in operation. The operation without the specified safety devices is not allowed.
5. This machine shall be operated by appropriately-trained operators.
6. For your personal protection, we recommend that you wear safety glasses.
7. For the following, turn off the power switch or disconnect the power plug of the machine from the receptacle.
   - 7-1 For threading needle(s), looper, spreader etc. And replacing bobbin.
   - 7-2 For replacing part(s) of needle, presser foot, throat plate, looper,spreader, feed dog, needle guard, folder, cloth guide etc.
   - 7-3 For repair work.
   - 7-4 When leaving the working place or when the working place is unattended.
8. If you should allow oil, grease, etc. used with the machine and devices to come in contact with your eyes or skin or swallow any of such liquid by mistake, immediately wash the contacted areas and consult a medical doctor.

9. Tampering with the live parts and devices, regardless of whether the machine is powered, is prohibited.
10. Repair, remodeling and adjustment works must only be done by appropriately trainde technicians or specially skilled personnel. Only spare parts designated by can be used for repairs.
11. General maintenance and inspection works have to be done by appropriately trained personnel.
12. Repair and maintenance works of electrical components shall be conducted by qualified electric technicians or under the audit and guidance of specially skilled personnel. Whenever you find a failure of any of electrical components, immediately stop the machine.
13. Before making repair and maintenance works on the machine equipped with pneumatic parts such as an air cylinder, the air compressor has to be detached from the machine and the compressed air supply has to be cut off. Existing residual air pressure after disconnecting the air compressor from the machine has to be expelled. Exceptions to this are only adjustments and performance checks done by appropriately trained technicians or specially skilled personnel.
14. Periodically clean the machine throughout the period of use.

15. Grounding the machine is always necessary for the normal operation of the machine. The machine has to be operated in an environment that is free from strong noise sources such as high-freauency welder.
16. An appropriate power plug has to be attached to the machine by eledtric technicians. Power plug has to be commected to a grounded receptacle.

17. The machine is only allowed to be used for the purpose intended. Other used are not allowed.
18. Remodel or modify the machine in accordance with the safely rules/standards while taking all the effective safety measures. assumes no responsibility for damage by remodeling or modification of the machine.

19. Warning hints are marked with the two shown symbols.

Danger of injury to operator or service staff

Items requiring special attention

FOR SAFE OPERATION

DANGER	1. To avoid electrical shock hazards, neither open the cover of the electrical box for the motor nor touch the components mounted inside the electrical box.
CAUTION	1. To avoid personal injury, never operate the machine with any of the belt cover, Finger guard or safety devices removed. 2. To prevent possible personal injuriescaused by being caught in the machine, Keep your fingers, head and clothes away from the handwheel, V belt and the motor while the machine is operation. In addition, place nothing around them. 3. To avoid personal injury, never put your hand under the needle when you turn "ON" the power switch or operate the machine. 4. To avoid personal injury, never put your fingers into the thread take-up cover while the machine is in operation. 5. The hook rotates at a high speed while the machine is in operation. To prevent possible injury to hands, be sure to beep your hands away from the vicinity of the hook during operation. In addition, be sure to turn OFF the power to the machine when replacing the bobbin. 6. To avoid possible personal injuries,be careful not to allow your fingers in the machine when tilting/raising the machine head. 7. To avoid possible accidents because of abrupt start of the machine, turn OFF the power to the machine when tilting the machine head. 8. If your machine is equipped with a servo-motor, the motor does not produce noise while the machine is at rest. To avoid possible accidents due to abrupt start of the machine, be sure to turn OFF the power to the machine. 9. To avoid electrical shock hazards, never operate the aewing machine with the ground wire for the power supply removed. 10. To prevent possible accidents because of electric shock or damaged electrical components(s), turn OFF the power switch in prior to the connection/disconnection of the power plug.

BEFORE OPERATION

CAUTION:
To avoid malfunction and damage of the machine, confirm the following.

- Before you put the machine into operation for the first time after the set up, clean it thoroughly.
- Remove all dust gathering during transportation and oil it well.
- Confirm that the power plug has been properly connected to the power supply.
- Never use the machine in the state where the voltage type is different from the designated one.
- The direction of rotation of the sewing machine is counterclockwise as observed from the handwheel side. Be careful not to rotate it in reverse direction.

Consew 7360R-7DD series
CONTENTS

◆ INSTRUCTION MANUAL

1. SPECIFICATIONS 1
2. INSTALLATION 1
3. ADJUSTING THE HEIGHT OF THE KNEE LIFTER 2
4. INSTALLING THE THREAD STAND 3
5. LUBRICATE 3
6. LUBRICATION 3
7. ADJUSTING THE AMOUNT OF OIL(OIL SPLASHES) IN THE HOOK 4
8. ATTACHING THE NEEDLE 5
9. SETTING THE BOBBIN INTO THE BOBBIN CASE 6
10. ADJUSTING THE STITCH LENGTH 6
11. PRESSER FOOT PRESSURE 6
12. HAND LIFTER 6
13. ADJUSTING THE HEIGHT OF THE PRESSER BAR 7
14. THREADING THE MACHINE HEAD 7
15. THREAD TENSION 8
16. THREAD TAKE-UP SPRING 8
17. ADUSTING THE THREAD TAKE-UP STROKE 9
18. NEEDLE-TO-HOOK RELATIONSHIP 9
19. HEIGHT OF THE FEED DOG 10
20. TILT OF THE FEED DOG 10
21. ADJUSTING THE FEED TIMING 11
22. ADJUSTMENT OF THE PEDAL 12
23. PEDAL OPERATION 12
24. ONE-TOUCH TYPE REVERSE FEED STITCHING MECHANISM 13
25. ELECTRONIC CLIP WIRE 13
26. DISASSEMBLING OF OPERATION PANEL 14

◆ PARTS BOOK

1. MACHINE FRAME & MISCELLANEOUS COVER COMPONENTS 17-20
2. MAIN SHAFT & THREAD-UP LEVER COMPONENTS 21-22
3. NEEDLE BAR,UPRIGHT SHAFT&HOOK DRIVING SHAFT COMPONENTS 23-24
4. HAND LIFTER COMPONENTS 25-26
5. FEED MECHANISM COMPONENTS 27-30
6. THREAD TRIMMER COMPONENTS 31-32
7. AUTOMATIC REVERSE FEED COMPONENTS 33-34
8. ELECTRONIC CONDUCTOR HOLDER NEEDLE SELECTION BOX COMPONENTS 33-34
9. OIL LUBLICATION COMPONENTS 35-36
10. OIL RESERVOIR COMPONENTS 35-36
11. THREAD STAND COMPONENTS 37-38
12. ACCESSORIES 37-38

1. SPECIFICATIONS

Model	7360R-7DD	7360RH-7DD
Application	General fabrics, light-weight and medium-weight materials	Medium-weight materials Heavy-weight materials
Sewing speed	Max. 4,000 rpm	Max. 3. 500 rpm
Max. Stitch length	4 mm	7mm
Needle	DBX1 #9~#18 (#14)	DBX1 #20~#23 (#21)
Presser foot lift	10 mm (standard) 13 mm (Max.)	
Lubricating oil	White Oil 10	
Noise	Workplace-related noise at sewing speed n = 4,500 min^{-1} : $L_{PA} \leqq$ 83 dB(A) Noise measurement according to DIN 45635-48-A-1.	

2. INSTALLATION

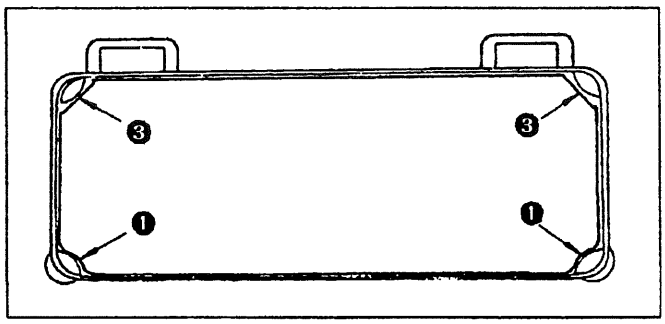

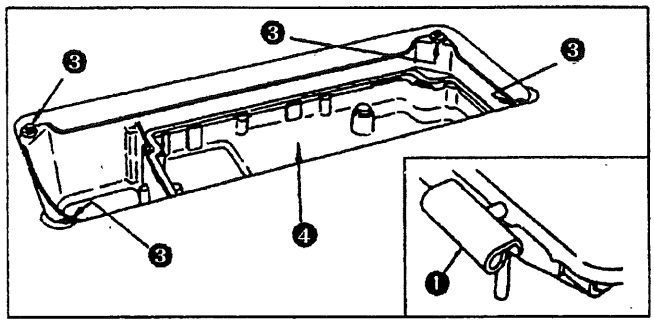

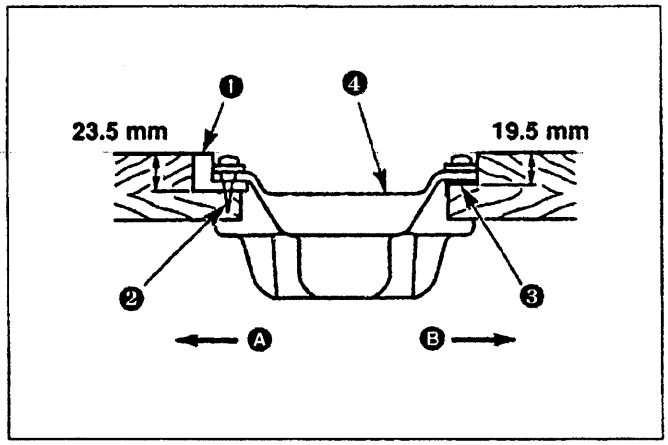

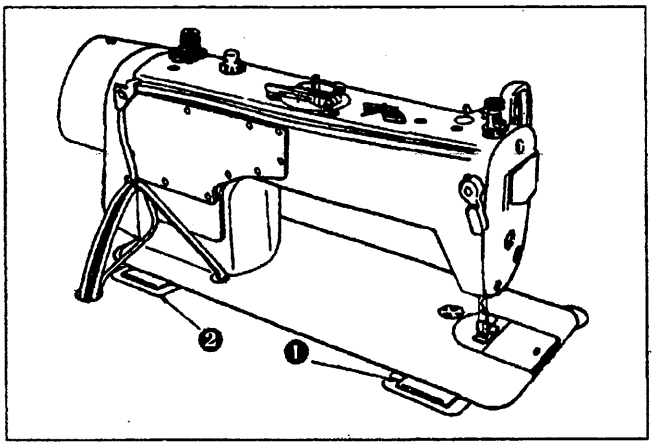

(1) Installing the under cover

1) The oil pan should rest on the four corners of the machine table groove.
2) Fix two rubber seats ❶ on side Ⓐ (operator's side) using nails ❷ as illustrated above. Fix two cushion seats ❸ on side Ⓑ (hinged side) using a rubber-based adhesive. Then place oil pan ❹ on the fixed seats.
3) Fit hinge ❶ into the opening in the machine bed, and fit the machine head to table rubber hinge ❷ before placing the machine head on cushions ❸ on the four corners.

3. 膝动提升高度的调整 / ADJUSTING THE HEIGHT OF THE KNEE LIFTER

注意
为了防止意外的起动造成的事故，请关掉电源后进行。

WARNING:
Turn OFF the power before starting the work so as to prevent accidents caused by abrupt start of the sewing machine.

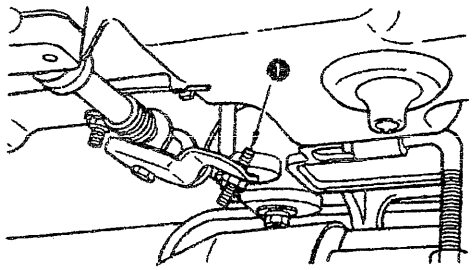

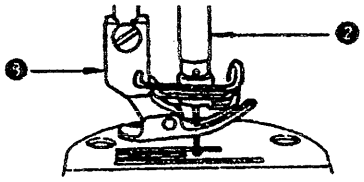

1）膝动提升的压脚标准高度为10mm。
2）调节膝动提升调节螺丝❶可以把压脚高度最大调整到13mm。（A型时最大为9mm。）
3）压脚提升到 10 mm 以上时，请注意针杆❷的前端下降到最底下时，不能碰到压脚❸。

1) The standard height of the presser foot lifted using the knee lifter is 10 mm.
2) You can adjust the presser foot lift up to 13 mm using knee lifter adjust screw❶. (Max. 9 mm for A type)
3) When you have adjusted the presser foot lift to over 10 mm, be sure that the bottom end of needle bar ❷ in its lowest position does not hit presser foot ❸.

4. 线架装置的安装 / INSTALLING THE THREAD STAND

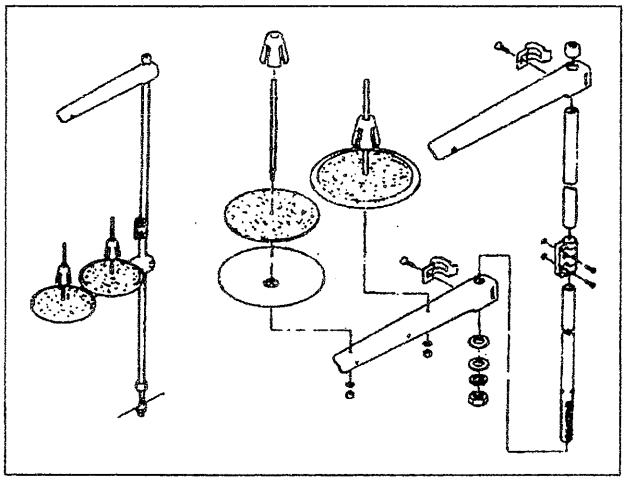

5. 加润滑脂 / LIPIN

注意
为了防止意外的起动造成的事故，请关掉电源后进行。
WARNING:
Turn OFF the power before starting the work so as to prevent accidents caused by abrupt start of the sewing machine.

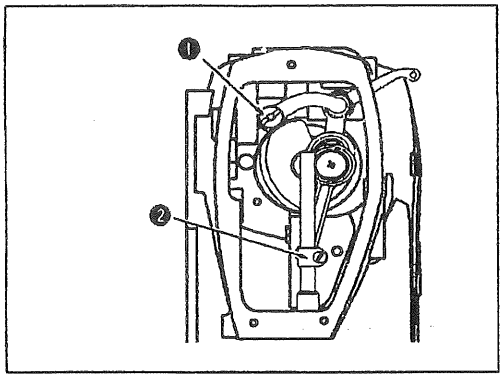

1）请先卸下挑线连杆销❶上的小螺钉后，将润滑脂注满挑线连杆销❶的小孔内。
2）请先拆下针杆连接柱组件后卸下针杆连接柱❷上的小螺钉，将润滑脂注满针杆连接柱❷的小孔内。

1) Full pore of the thread take-up crank shaft❶with lipin before disassembly small screw of the thread take–up crank shaft❶.
2) Disassembly small screw before Disassembly the needle rod holder ASM, then full pore of the needle bar connection ASM ❷with lipin.

6. 加油 / LUBRICATION

注意
为了防止意外的起动造成的事故，请关掉电源后进行。
WARNING:
Turn OFF the power before starting the work so as to prevent accidents caused by abrupt start of the sewing machine.

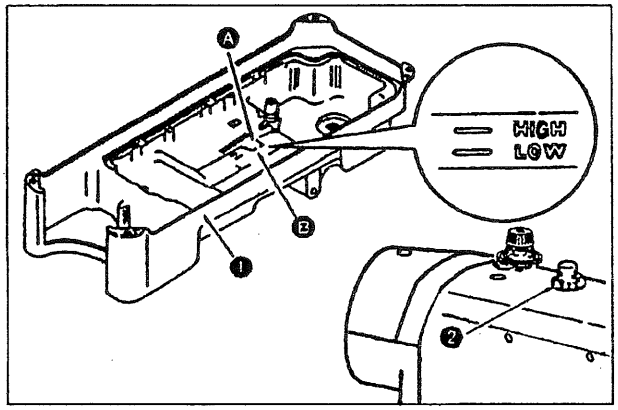

运转缝纫机前

1）请把机油倒进油槽❶里，一直加到 HIGH 标记❹的位置。
2）油槽的油面降到 LOW 标记❸以下时，请再次补充机油。
3）加油后运转缝纫机，如果润滑正常时，可以通过油窗❷看到油的流动。
4）油流动量的多少，与油量的多少无关。

注意 新缝纫机或较长时间没有使用的缝纫机在使用之前，应进行 10 分钟3,000~3,500 rpm 的磨合运转。

Information on lubrication

1) Fill oil pan ❶ with Machine Oil up to HIGH mark ❹.
2) When the oil level lowers below LOW mark ❸, refill the oil pan with the specified oil.
3) When you operate the machine after lubrication, you will see splashing oil through oil sight window ❷ if the lubrication is adequate.
4) Note that the amount of the splashing oil is unrelated to the amount of the lubricating oil.

When you first operate your machine after setup or after an extended period of disuse, run your machine at 3,000 to 3,500 rpm. for about 10 minutes for the purpose of break-in.

7. 关于旋梭部油量（迹）调整方法 / ADJUSTING THE AMOUNT OF OIL (OIL SPLASHES) IN THE HOOK

注意

旋梭是以高速运转。为了防止人身事故，调整油量时，请加以充分的注意。

WARNING:

Be extremely careful about the operation of the machine since the amount of oil has to be checked by turning the hook at a high speed.

① 油量（迹）确认专用纸
Amount of oil (oil splashes) confirmation paper

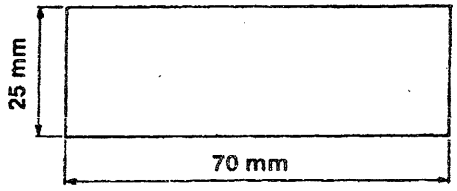

② 油量（迹）确认位置
Position to confirm the amount of oil (oil splashes)

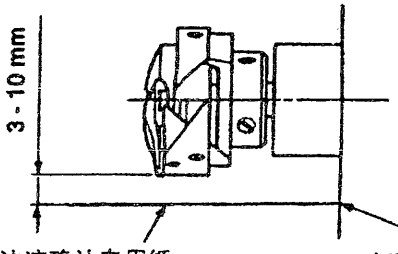

油迹确认专用纸
Oil splashes confirmation paper

应顶到接油槽壁
Closely fit the paper against the wall surface of the bed.

* 进行下列2）的作业时，请卸下滑板，同时要充分注意手指不要碰到旋梭。

1）冷机头时，请进行3分钟左右的空运转。（适当的断续运转）

2）油量（迹）确认专用纸在缝纫机转动后的状态下插进去。

3）请确认油量的油面高度应在HIGH和LOW的范围之内。

4）确认油量（迹）所需要的时间为5秒钟。（应看着表）

* When carrying out the procedure described below in 2, remove the slide plate and take extreme caution not to allow your fingers to come in contact with the hook.

1) If the machine has not been sufficiently warmed up for operation, make the machine run idle for approximately three minutes. (Moderate intermittent operation)
2) Place the amount of oil (oil splashes) confirmation paper under the hook while the sewing machine is in operation.
3) Confirm the height of the oil surface in the oil reservoir is within the range between "HIGH" and "LOW".
4) Confirmation of the amount of oil should be completed in five seconds. (Check the period of time with a watch.)

• 油量（油迹）适合标准 / Sample showing the appropriate amount of oil

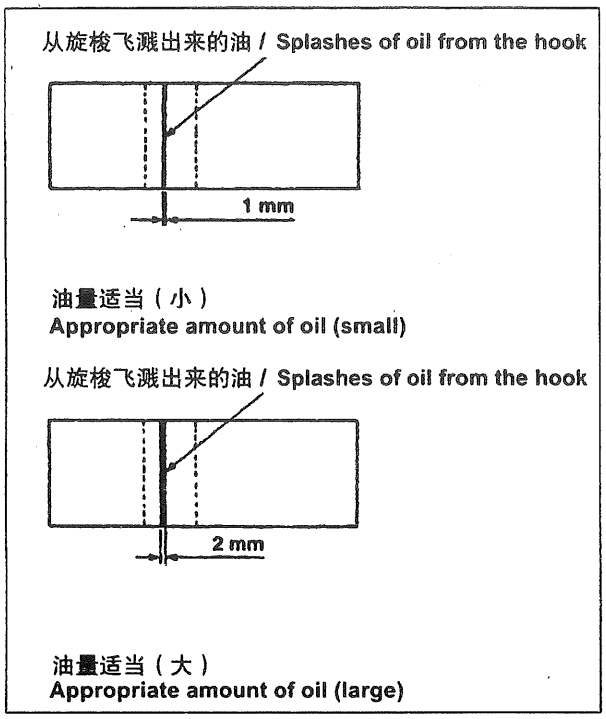

1）左图标样根据缝制供需需要微调增减，但注意不要过大增加或减少。
（油量过少时，会烧坏旋梭（发热）。油量过多时，会脏污缝制品。）
2）油量（油迹）应确认3次（3张）均无变化。

1) The amount of oil shown in the samples on the left should be finely adjusted in accordance with sewing processes. Be careful not to excessively increase/decrease the amount of oil in the hook. (If the amount of oil is too small, the hook will be seized (the hook will be hot). If the amount of oil is too much, the sewing product may be stained with oil.)
2) Adjust the amount of oil in the hook so that the oil amount (oil splashes) should not change while checking the oil amount three times (on the three sheets of paper)

• 旋梭油量（迹）调整 / Adjusting the amount of oil

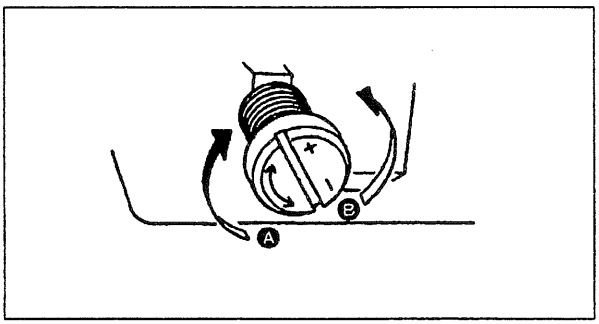

1）把下轴前端金属部件上的油量调节螺丝向“+”的方向（Ⓐ方向）转动，油量（迹）变多，向“–”的方向（Ⓑ方向）转动，油量（迹）变少。
2）油量调节螺丝调整后的油迹，应空运转30秒钟左右进行油量（迹）的确认。

1) Turning the oil amount adjustment screw attached on the hook driving shaft front bushing in the "+" direction (in direction Ⓐ) will increase the amount of oil (oil spots) in the hook, or in the "-" direction (in direction Ⓑ) will decrease it.
2) After the amount of oil in the hook has been properly adjusted with the oil amount adjustment screw, make the sewing machine run idle for approximately 30 seconds to check the amount of oil in the hook.

8. 机针的安装 / ATTACHING THE NEEDLE

注意
为了防止意外的起动造成的事故，请关掉电源后进行。
WARNING:
Turn OFF the power before starting the work so as to prevent accidents caused by abrupt start of the sewing machine.

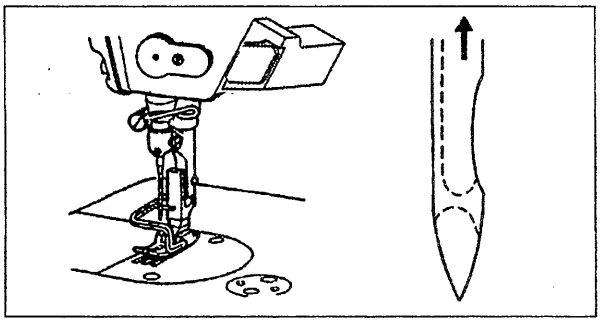

9. 梭心的安装方法 / SETTING THE BOBBIN INTO THE BOBBIN CASE

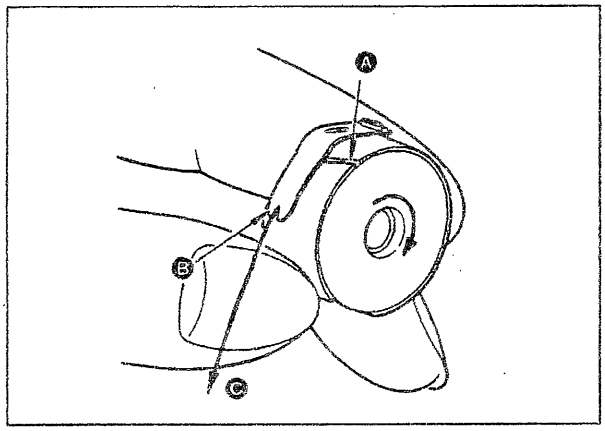

1）把线穿过梭壳的穿线口Ⓐ，然后把线往Ⓑ方向拉，从线张力弹簧下面的穿线口Ⓑ拉出来。

2）拉底线Ⓒ，确认梭心是否按箭头方向转动。

1）Pass the thread through thread slit Ⓐ, and pull the thread in direction Ⓑ.
By so doing, the thread will pass under the tension spring and come out from notch Ⓑ.

2）Check that the bobbin rotates in the direction of the arrow when thread Ⓒ is pulled.

10. 线迹长度的调节 / ADJUSTING THE STITCH LENGTH

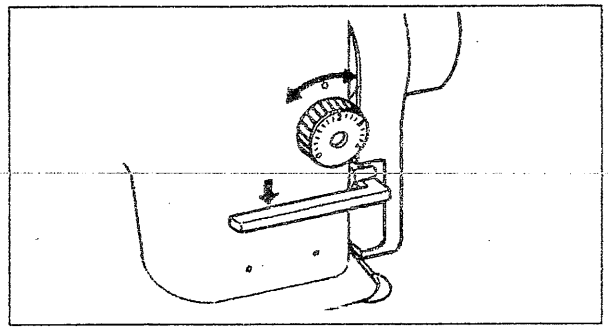

11. 压脚压力的调节 / PRESSER FOOT PRESSURE

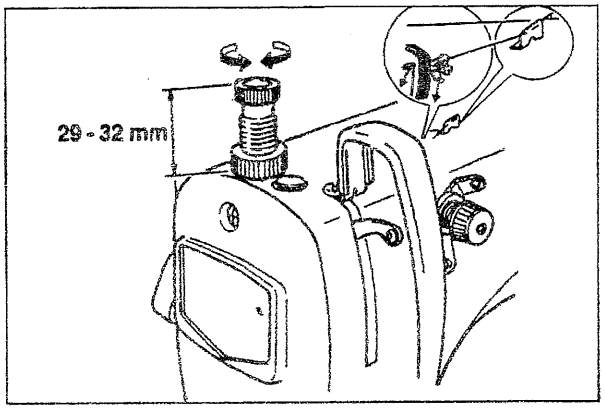

12. 关于压脚提升 / HAND LIFTER

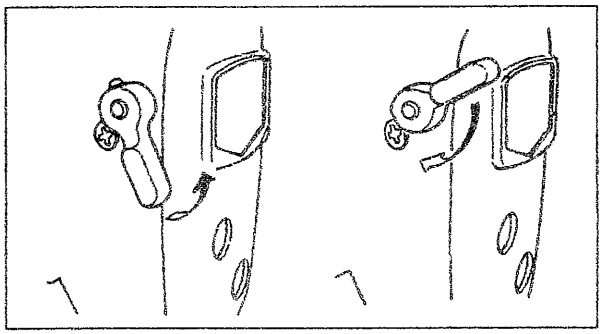

13. 压脚杆高度的调整 / ADJUSTING THE HEIGHT OF THE PRESSER BAR

注意
为了防止意外的起动造成的事故，请关掉电源后进行。

WARNING:
Turn OFF the power before starting the work so as to prevent accidents caused by abrupt start of the sewing machine.

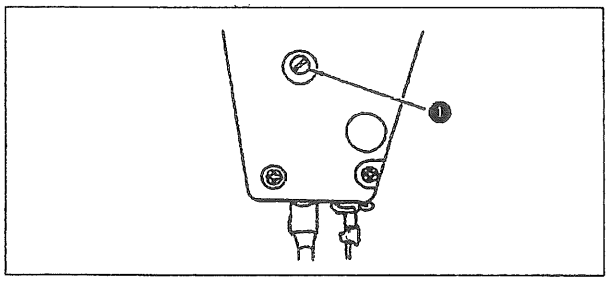

1) 变更压脚杆的高度或压脚的角度时，请拧松压脚杆套管固定螺丝❶进行调整。
2) 调整后，拧紧固定螺丝❶。

1) Loosen setscrew ❶,and adjust the presser bar height or the angle of the presser foot.
2) After adjustment, securely tighten the setscrew❶.

14. 上线的穿线方法 / THREADING THE MACHINE HEAD

注意
为了防止意外的起动造成的事故，请关掉电源后进行。

WARNING:
Turn OFF the power before starting the work so as to prevent accidents caused by abrupt start of the sewing machine.

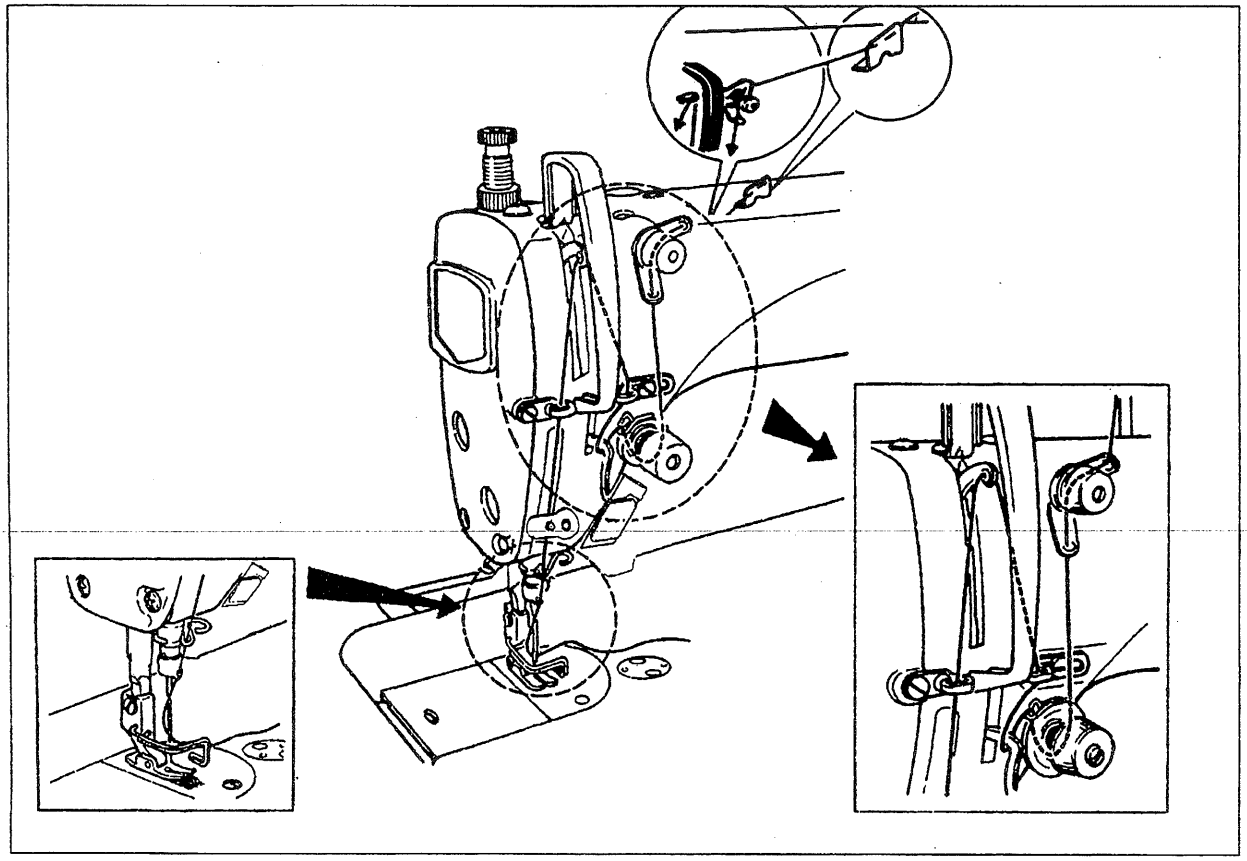

15. 线张力器 / THREAD TENSION

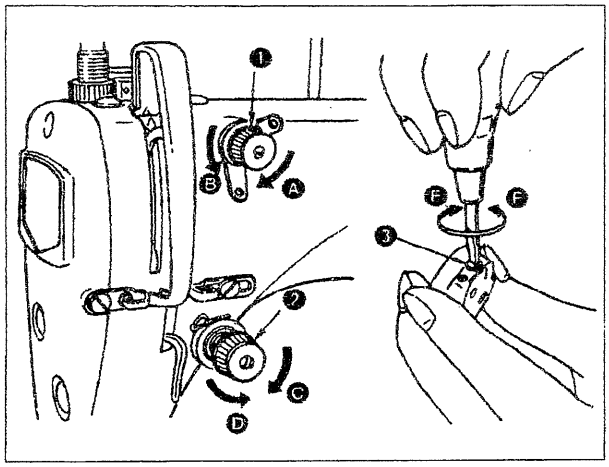

（1）上线张力的调整

1）向右Ⓐ的方向转动第一线张力螺母❶，切线后残留在机针上的线长度变短。

2）向左Ⓑ的方向转动，则长度变长。

3）向右Ⓒ的方向转动第二线张力螺母❷，上线张力变强。

4）向左Ⓓ的方向转动，则上线张力变弱。

（2）底线张力的调整

1）向右Ⓔ的方向转动线张力螺丝❸，底线张力变强。

2）向左Ⓕ的方向转动线张力螺丝，则底线张力变弱

(1) Adjusting the needle thread tension

1) As you turn thread tension No.1 nut ❶ clockwise (in direction Ⓐ), the thread remaining on the needle after thread trimming will be shorter.
2) As you turn nut ❶ counterclockwise (in direction Ⓑ), the thread length will be longer.
3) As you turn thread tension No.2 nut ❷ clockwise (in direction Ⓒ), the needle thread tension will be increased.
4) As you turn nut ❷ counterclockwise (in direction Ⓓ), the needle thread tension will be decreased.

(2) Adjusting the bobbin thread tension

1) As you turn tension adjust screw ❸ clockwise (in direction Ⓔ), the bobbin thread tension will be increased.
2) As you turn screw ❸ counterclockwise (in direction Ⓕ), he bobbin thread tension will be decreased.

16. 挑线弹簧 / THREAD TAKE-UP SPRING

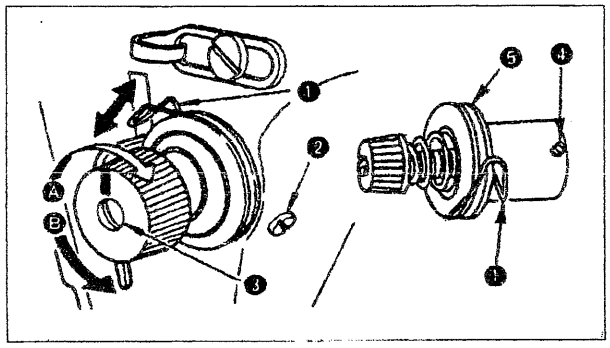

（1）挑线弹簧❶的行程量调整

1）拧松线张力台的固定螺丝❷。

2）向右Ⓐ的方向转动线张力杆❸，则行程量变大。

3）向左Ⓑ为了防止布的跑偏，需要提早。

（2）挑线弹簧❶的压力调整

1）拧松固定螺丝❷，卸下线张力杆❺。

2）拧松线张力杆固定螺丝❹进行调整。

3）向右Ⓐ的方向转动线张力杆❸则压力变强。

4）向左Ⓑ的方向转动压力则压力变弱。

(1) Changing the stroke of thread take-up spring❶

1) Loosen setscrew ❷.
2) As you turn tension post ❸ clockwise (in direction Ⓐ), the stroke of the thread take-up spring will be increased.
3) As you turn the knob counterclockwise (in direction Ⓑ), the stroke will be decreased.

(2) Changing the pressure of thread take-up spring❶

1) Loosen setscrew ❷, and remove thread tension (asm) ❺.
2) Loosen setscrew ❹.
3) As you turn tension post ❸ clockwise (in direction Ⓐ), the pressure will be increased.
4) As you turn the post ❸ counterclockwise (in direction Ⓑ), the pressure will be decreased.

17. 挑线杆挑线量的调整 / ADJUSTING THE THREAD TAKE-UP STROKE

注意
为了防止意外的起动造成的事故，请关掉电源后进行。
WARNING:
Turn OFF the power before starting the work so as to prevent accidents caused by abrupt start of the sewing machine.

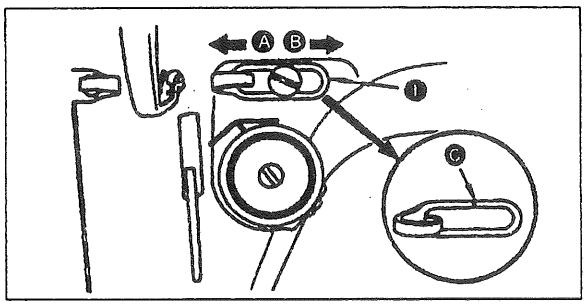

1）缝制厚料时，向左Ⓐ的方向移动线导向器❶，则挑线量变多。
2）缝制薄料时，向右Ⓑ的方向移动线导向器❶，则挑线量变少。
3）线导向器❶在刻线Ⓒ对准螺丝的中心时是标准位置。

1) When sewing heavy-weight materials, move thread guide ❶ to the left (in direction Ⓐ) to increase the length of thread pulled out by the thread take-up.
2) When sewing light-weight materials, move thread guide ❶ to the right (in direction Ⓑ) to decrease the length of thread pulled out by the thread take-up.
3) Normally, thread guide ❶ is positioned in a way that marker line Ⓒ is aligned with the center of the screw.

18. 机针与旋梭的关系 / NEEDLE-TO-HOOK RELATIONSHIP

注意
为了防止突然启动造成人身事故，请关掉电源，确认马达确实停止转动后再进行。
WARNING:
To avoid possible personal injury due to abrupt start of the machine, turn off the power to the machine and check to be sure that the motor has totally stopped rotating in prior.

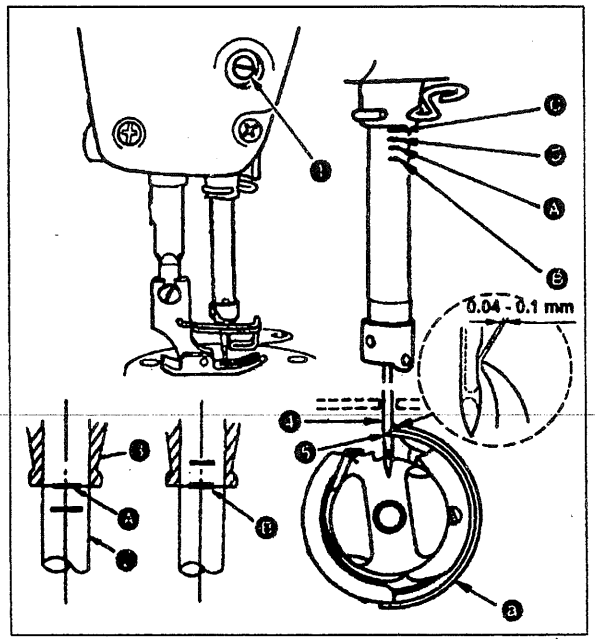

(1) 请按如下方法调整机针和旋梭。

1）转动飞轮，让针杆降到最下点，然后拧松针杆套管固定螺丝❶。

（决定针杆高度）

2）[DB针时]
把针杆❷的刻线Ⓐ对准针杆下套筒❸的下端，然后拧紧针杆套管固定螺丝❶。
[DA针时]
把针杆❷的刻线Ⓒ对准针杆下套筒❸的下端，然后拧紧针杆套管固定螺丝❶。

（决定旋梭❷ 的安装位置）

3）[DB针时]
拧松3根旋梭固定螺丝，转动飞轮在针杆❷上升的方向，把刻线Ⓑ对准针杆下套筒❸的下端。
[DA针时]
拧松3根旋梭固定螺丝，转动飞轮在针杆❷上升的方向，把刻线Ⓓ对准针杆下套筒❸的下端。

4) 在此状态下，让旋梭尖❺对准机针❹的中心，把机针与旋梭的间隙调整为0.04～0.1mm（大致），然后拧紧螺丝。

注意
间隙过小的话，会损伤旋梭尖。间隙过大的话，会跳针。

(1) Adjust the timing between the needle and the hook as follows:

1) Turn the handwheel to bright the needle bar down to the lowest point of its stroke, and loosen setscrew ❶.

(Adjusting the needle bar height)

2) **(For a DB needle)** Align marker line Ⓐ on needle bar ❷ with the bottom end of needle bar lower bushing ❸, thentighten setscrew ❹.
(For a DA needle) Align marker line Ⓒ on needle bar ❷ with the bottom end of needle bar lower bushing ❸, thentighten setscrew ❹.

(Adjusting position of the hook ⓐ)

3) **(For a DB needle)** Loosen the three hook setscrews, turn the handwheel and align marker line Ⓑ on ascending needle bar with the bottom end of needle bar lower bushing ❸.
(For a DA needle) Loosen the three hook setscrews, turn the handwheel and align marker line Ⓓ on ascending needle bar with the bottom end of needle bar lower bushing ❸.

4) After making the adjustments mentioned in the above steps, align hook blade point ❺ with the center of needle ❹. Provide a clearance of 0.04 mm to 0.1mm (reference value) between the needle and the hook, then securely tighten setscrews in the hook.

If the clearance between the blade point of hook and the needle is smaller than the specified value, the blade point of hook will be damaged. If the clearance is larger, stitch skipping will result.

19. 送布牙的高度 / HEIGHT OF THE FEED DOG

注意
为了防止意外的起动造成的事故，请关掉电源后进行。
WARNING:
Turn OFF the power before starting the work so as to prevent accidents caused by abrupt start of the sewing machine.

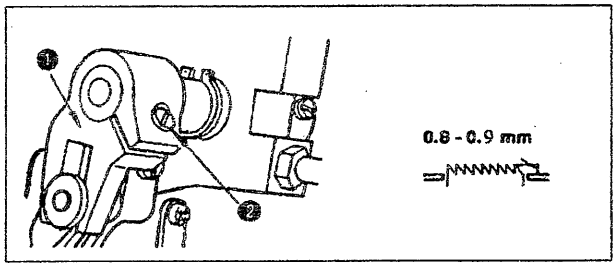

调节送布牙的高度时
① 拧松上下送布双叉 ❶ 的紧固螺丝❷。
② 上下移动送布台进行调节。
③ 拧紧固定螺丝❷。

注意 紧固压力过弱的话，抬牙叉部的动作则变得不灵活了。

If the calmping pressure is insufficient, the motion of the forked portion becomes heavy.

To adjust the height of the feed dog:
① Loosen screw ❷ of crank ❶.
② Move the feed bar up or down to make adjustment.
③ Securely tighten screw ❷.

20. 送布牙的倾斜 / TILT OF THE FEED DOG

注意
为了防止意外的起动造成的事故，请关掉电源后进行。
WARNING:
Turn OFF the power before starting the work so as to prevent accidents caused by abrupt start of the sewing machine.

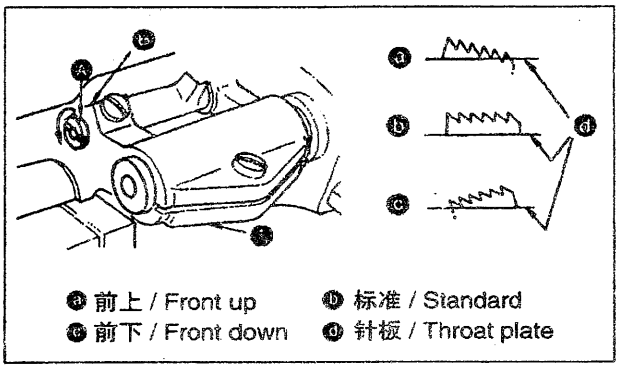

1）标准倾斜（水平）度是送布台轴的刻点Ⓐ和送布台曲柄❶的Ⓑ部一致时的位置。
（的标准倾斜是对Ⓑ部呈90度水平送布面向轴侧的位置。）
2）为了防止缝制皱摺，向前抬起送布牙时，请拧松固定螺丝，把螺丝刀插入送布台轴，然后沿箭头方向转90度。
3）为了减少布的偏斜，向前下降送布牙时，请沿与箭头方向相反方向转90度。

注意 调节了送布牙之后，送布齿的高度会有变化，请再次确认。

1) The standard tilt (horizontal) of the feed dog is obtained when marker dot Ⓐ on the feed bar shaft is aligned with marker dot Ⓑ on feed rocker ❶. (the marker dot Ⓑ inclines forward the feed rocker shart by 90°, as standard).
2) To tilt the feed dog with its front up in order to prevent puckering, loosen the setscrew, and turn the feed bar shaft 90° in the direction of the arrow, using a screwdriver.
3) To tilt the feed dog with its front down in order to prevent uneven material feed, turn the feed bar shaft 90° in the opposite direction from the arrow. (The standard tilt for.)

Caution **Whenever the feed dog tilt is adjusted, the feed dog height will be changed. So, it is necessary to check the height after tilt adjustment.**

21. 送布相位的调节 / ADJUSTING THE FEED TIMING

注意
为了防止突然启动造成人身事故，请关掉电源，确认马达确实停止转动后再进行。
WARNING:
To avoid possible personal injury due to abrupt start of the machine, turn off the power to the machine and check to be sure that the motor has totally stopped rotating in prior.

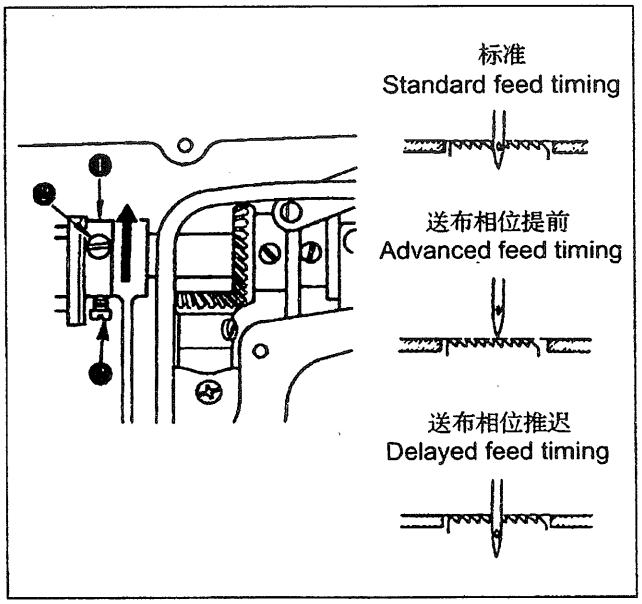

1）拧松送布偏心凸轮❶的固定螺丝❷、❸，朝箭头方向或反箭头方向移动送布偏心凸轮，然后拧紧固定螺丝。
2）标准调节位置是送布牙从针板下落时，送布牙上面与针孔上端对准针板上面的位置。
3）提早送布相位以防止布偏斜时，请向箭头方向移动送布偏心凸轮。
4）为了良好的紧线而推迟相位时，请逆箭头方向移动偏心凸轮。

注意 移动距离过大会发生断针故障。

1) Loosen screws ❷ and ❸ in feed eccentric cam ❶, move the feed eccentric cam in the direction of the arrow or opposite direction of the arrow, and firmly tighten the screws.
2) For the standard adjustment, adjust so that the top surface of feed dog and the top end of needle eyelet are flush with the top surface of throat plate when the feed dog descends below the throat plate.
3) To advance the feed timing in order to prevent uneven material feed, move the feed eccentric cam in the direction of the arrow.
4) To delay the feed timing in order to increase stitch tightness, move the feed eccentric cam in the opposite, direction from the arrow.

Caution **Be careful not to move the feed eccentric cam too far, or else needle breakage may result.**

22. 踏板的调整 / ADJUSTMENT OF THE PEDAL

注意
为了防止意外的起动造成的事故，请关掉电源后进行。

WARNING:
Turn OFF the power before starting the work so as to prevent accidents caused by abrupt start of the sewing machine.

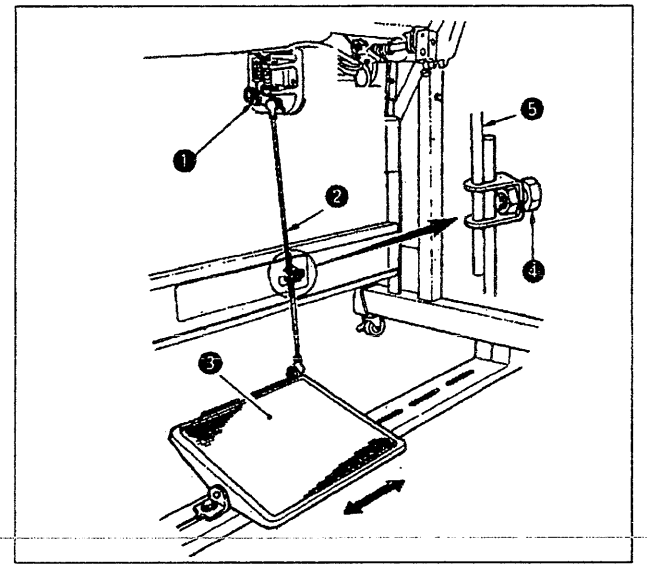

（1）连接杆的安装

1）向箭头方向移动踏板调节板 ❸，让踏板拨杆 ❶ 和连接杆❷ 呈一直线。

（2）踏板的角度

1）调节连接杆的长度就可以自由地改变踏板的倾斜度。

2）拧松调节螺丝❹，拉出插入连接杆 ❺进行调整。

(1)Installing the connecting rod

1) Move pedal ❸ to the right or left as illustrated by the arrow so thtat motor control lever ❶ and connecting rod ❷ are straightened.

(2)Adjusting the pedal angle

1) The pedal tilt can be freely adjusted by changing the length of the connecting rod.

2) Loosen adjust screw ❹ , and adjust the length of connecting rod ❺.

23. 踏板操作 / PEDAL OPERATION

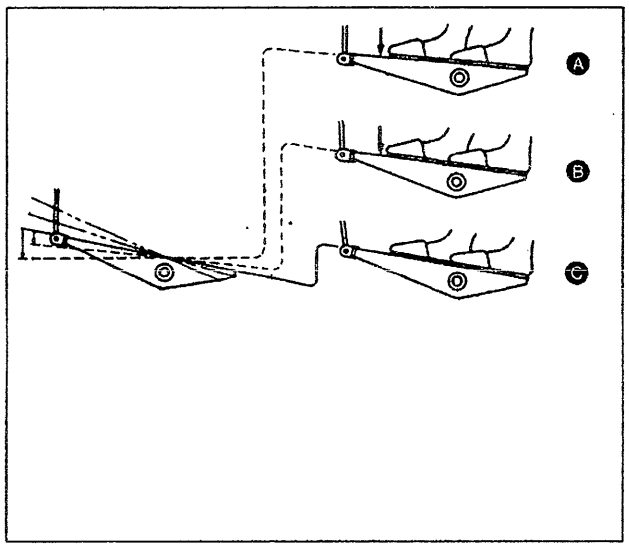

（1）踏板按4个阶段进行操作。

1）向前轻轻踩踏板为低速缝制Ⓑ。

2）再用力向前踩踏板则变为高速缝制Ⓐ。

3）把踏板返回到脚轻轻地放到踏板上的位置缝纫机停止Ⓒ。（机针上停止或下停止位置）

(1) The pedal is operated in the following four steps:

1) The machine runs at low sewing speed when you lightly depress the front part of the pedal. Ⓑ

2) The machine runs at high sewing speed when you further depress the front part of the pedal. Ⓐ

3) The machine stops (with its needle up or down) when you reset the pedal to its original position. Ⓒ

24. 触键手动倒缝 / ONE-TOUCH TYPE REVERSE FEED STITCHING MECHANISM

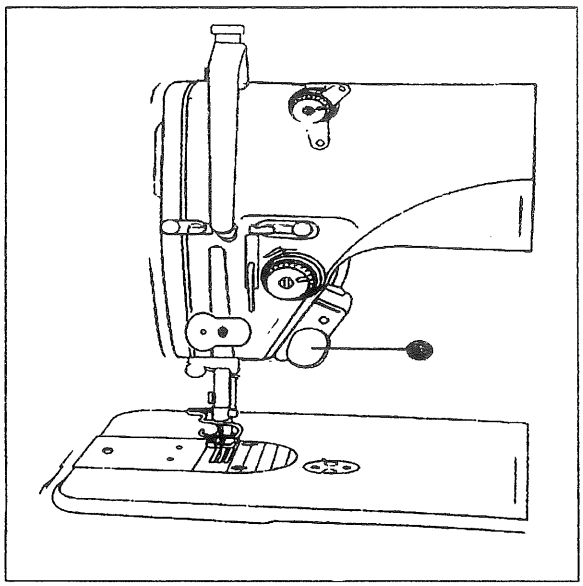

(1) How to operate

1) The moment switch lever ❶ is pressed, the machine performs reverse feed stitching.
2) The machine performs reverse feed stitchng as long as the switch lever is held pressed.
3) The machine resumes normal feed stitching the moment the switch lever is released.

WARNING:
Turn OFF the power before starting the work so as to prevent accidents caused by abrupt start of the sewing machine.

(2) Height of the switch lever

1) Adjust the height of switch lever❶ so that it can be easily operated.

（1）使用方法

1）按开关拨杆❶，缝纫机立即变为倒送，进行倒缝。
2）按下拨杆的时间，可以进行倒缝。
3）放开拨杆，则立即返回到正缝。

注意 为了防止意外的起动造成的事故，请关掉电源后进行。

（2）开关拨杆的高度

1）请把开关拨杆❶的高度调整到使用方便的位置。

25. 电子夹线 / ELECTRONIC CLIP WIRE

注意
为了防止意外的起动造成的事故，请关掉电源后进行。

WARNING:
Turn OFF the power before starting the work so as to prevent accidents caused by abrupt start of the sewing machine.

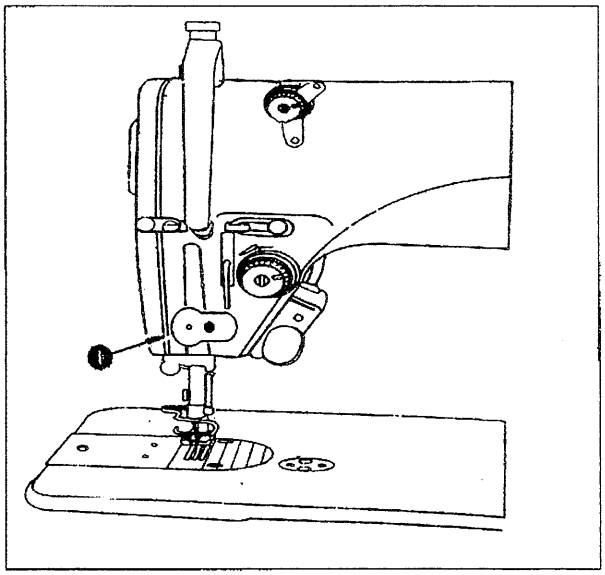

（1）电子夹线器。❶

1) Electronic clip wire ❶

2) 电子夹器❷打开为 1mm。

2) Electronic clip wire ❷ open as 1mm。

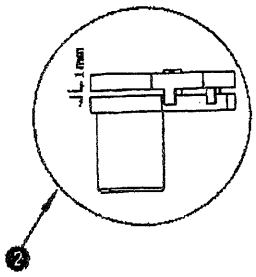

26. 操作面板，拆装顺序 DISASSEMBLING OF OPERATION PANEL

注意
为了防止意外的起动造成的事故，请关掉电源后进行。
WARNING:
Turn OFF the power before starting the work so as to prevent accidents caused by abrupt start of the sewing machine.

拆步骤 Disassembling steps

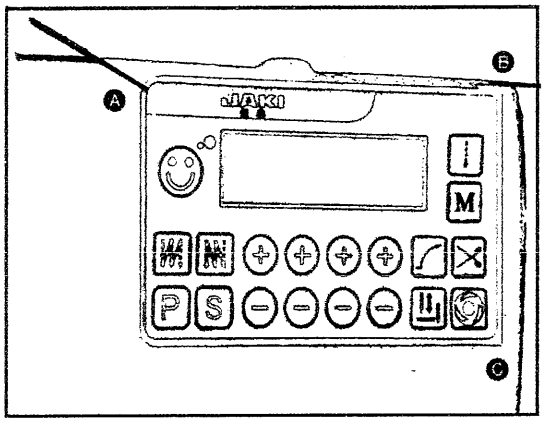

1. 用机针撬开A. B. C. 位置 .

1. Use needle to open a. b. c.

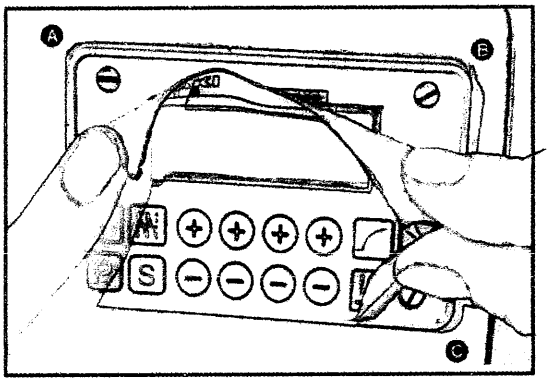

2. 轻轻揭开操作面板A. B. C. 位置，露出螺钉的位置.

2. operation panel a. b. c. place To see the screw

3. 拧下螺钉

3. Twist down the screw

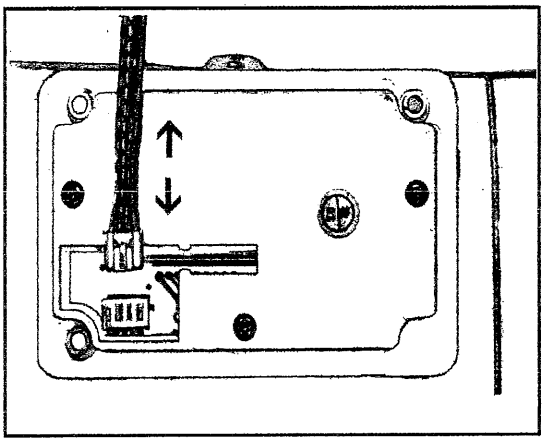

4. 取下操作面板，拨出连接插头

4. Remove the operation panel, Set aside

装步骤 assembling steps

按先拆后装的顺序装上操作面板。

Install the operation panel according to the first of disassembly after assembly.